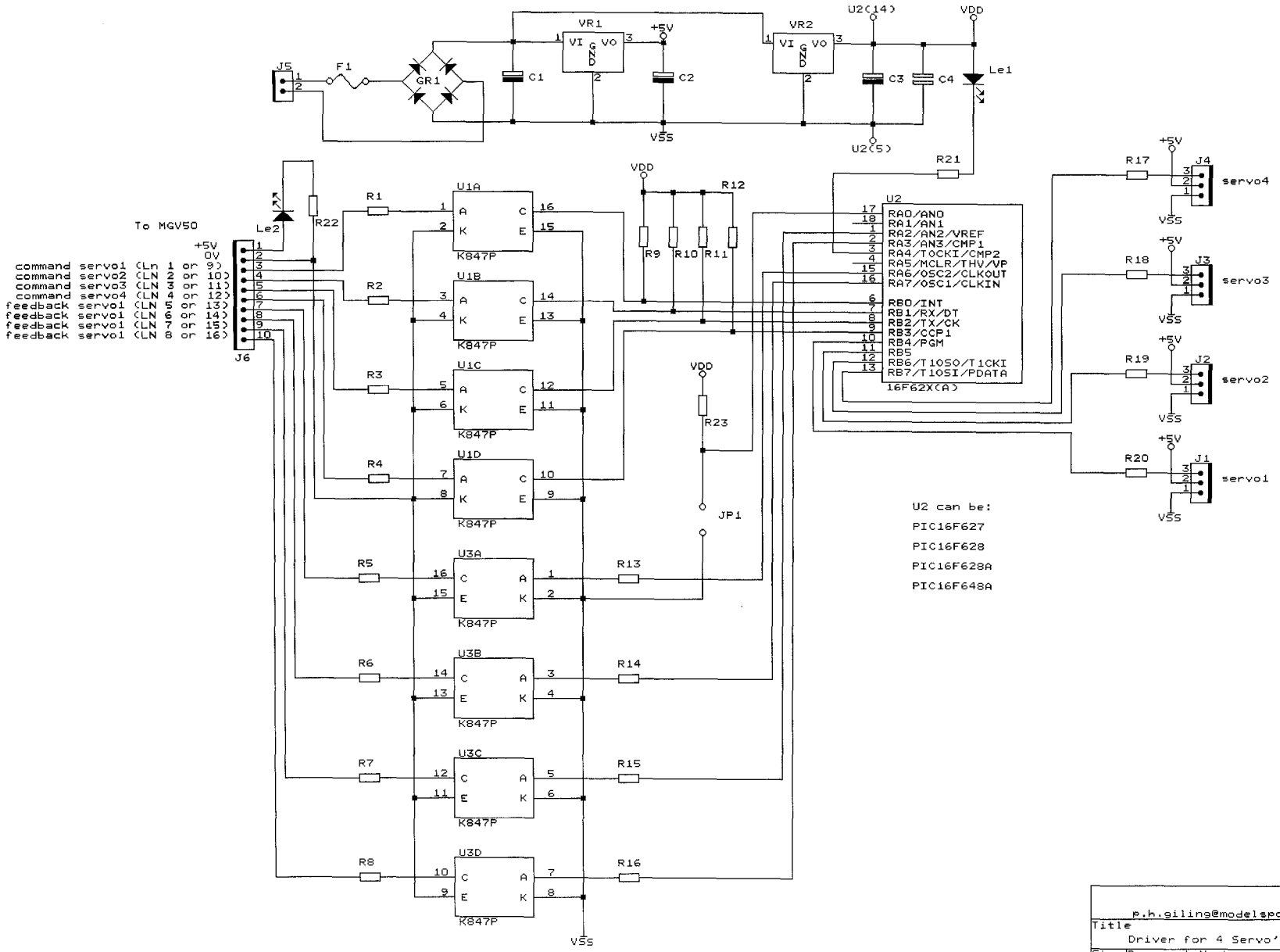

p.h.giling@modelspoorgroepvenlo.nl

Title: Driver for 4 Servo's with feed-back

Size	Document Number	REV
B	MGV81F	1.2

Date: August 9, 2009 Sheet of